eSSL®
Security at Fingertips

FB-Q-2000

FB-Q-2000 Flap Barrier

Specifications

Passage width (max) : 550mm
Unlock time : 0.2 seconds
Throughput rate : 35 p/m
Power supply : 100V ~ 240V
Operational voltage : 24V
Working temperature : -25˚C ~ +70˚C
Power consumption : 35W
Dimension in mm : 1400 x 300 x 990
Input signal : Dry contact

Dimensions

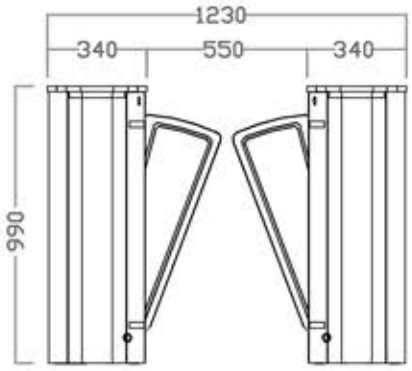

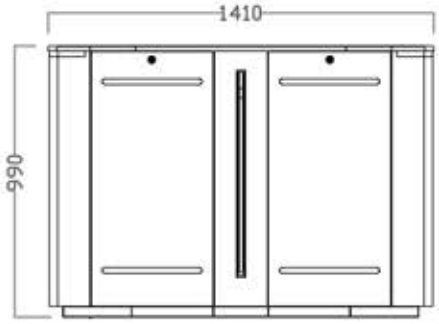

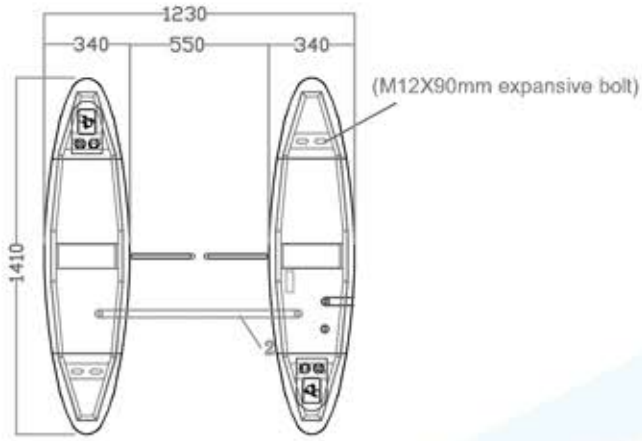

Disclaimer: Brief specifications are mentioned here. Specifications may change without prior notice. Customers are advised to check with us before purchase.
Actual product may differ slightly to that depicted for ongoing product development.
www.esslsecurity.com

ISO FC CE RoHS