eSSL

Security at Fingertips

Operating Instructions

Tri-pod Turnstile

www.esslsecurity.com

Tri-pod Turnstile

Warnings:

Before starting installation, you must pay attention to those notes,

1. Before starting installation and operation or maintenance, cut off power supply.

2. The product must be earthed, and an earth leakage breaker is necessary on the power supply.

3. As for electric cable type and section, we suggest to use the cable type of <HAR> with minimum section of 2.0mm^2.

4. Do not change the original inside wiring.

5. Keep the automatic control (push-button, remote control, etc) out of the reach of children .The control system must be installed at a minimum height of 1.5mm the ground surface.

6.Never open the door or the cover of the cabinet when the machine is working .

7.Do not permit children to play on or around a turnstile . If child want to go through the turnstile, the parents must look after them.

8.Before delivery, we will dismantle two arm bar, which can reduce some package cost and volume, so before using turnstile, Firstly, turnstile should power on, and raise drop arm down device by hand, which making the circle solenoid attracts drop arm down plate. You should assemble arm bar like following picture.

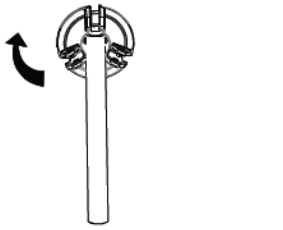

Fig 1. Please rotate turnplate 120°

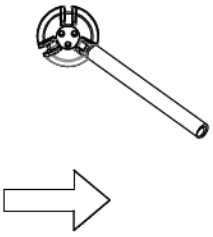

Fig2.

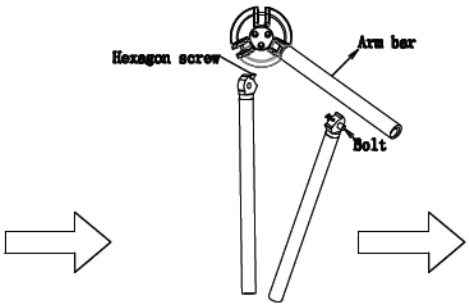

Fig 3. Please loose hexagon socket cap screws

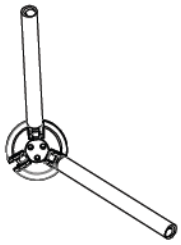

Fig 4. Please insert arm bar

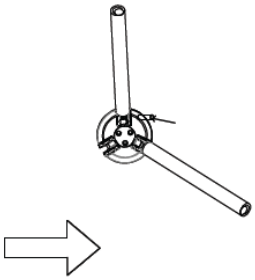

Fig 5. Please insert bolt

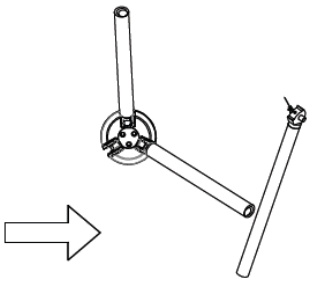

Fig 6. Please tighten hexagon socket cap screws

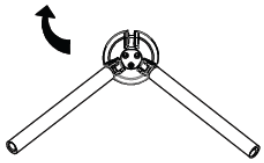

Fig 7. Please install third arm bar like second arm bar

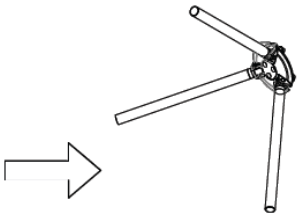

Fig8.

9. Before install turnstile, you should prepare for this follow tool.

Tool name	QTY	Tool name	QTY
Electric percussion drill	1 set	Straight screwdriver	1 set
Adjustable spanner	1 set	Cross screwdriver	1 set
Hammer	1 set	Hexagon socket key set	1 set
Wire stripper	1 set	M12 expansion screw	10 pcs

Brief Introduction

The electronic tripod turnstile, which is an electric control mechanism installed in the building structure, is used to form an access control system. The rotation unit consists of three tubular arms which are positioned at 120 ° intervals so that when the unit is at rest ,one arm will always be in the horizontal position(Barrier position).The movement of the rotation unit can be realized by pushing arms lightly. If arm rotates more than a settled position, the elastic potential energy will drive the rotation unit to complete the whole process of rotation

The electronic tripod turnstile, which has integrated the electronic and mechanical rotation, is a kind of advanced access controller. After being integrated with RFIC, IC and magnetic card, it can meet various requirements of customers and therefore can be widely used in such sites as conference room, park and railway station, etc

Component Introduction

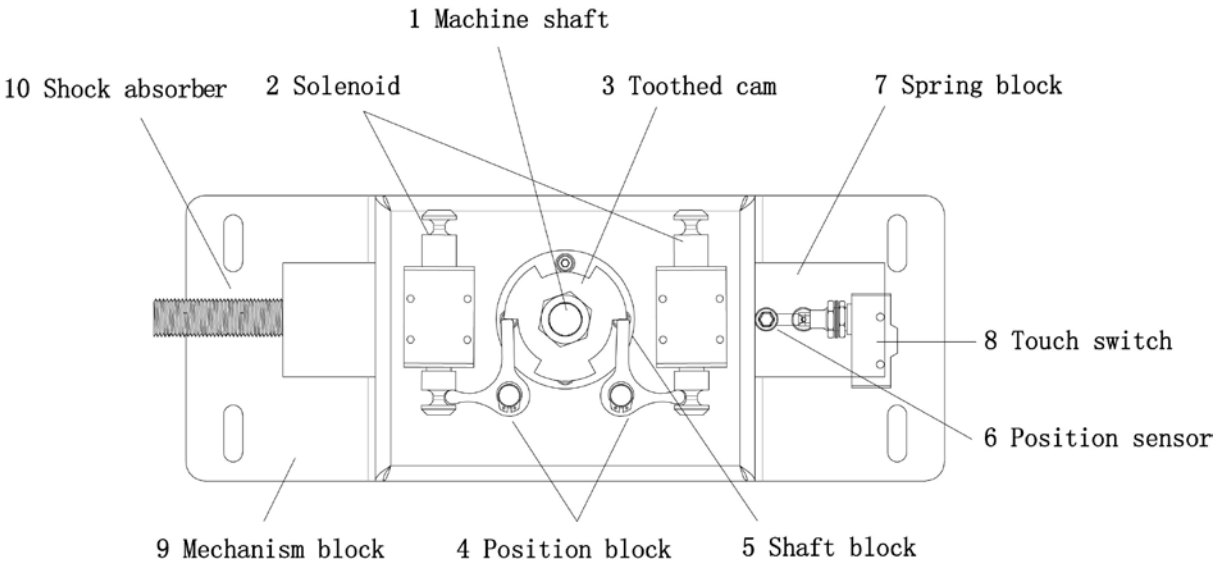

Fig.1

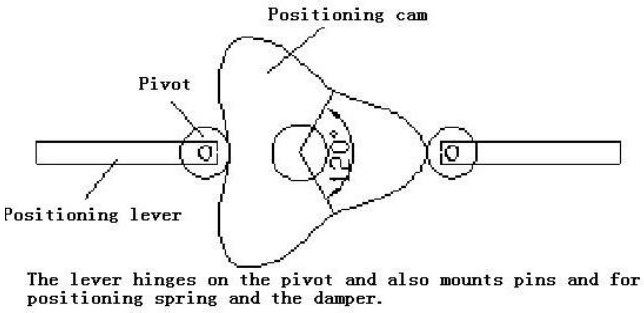

Fig. 2

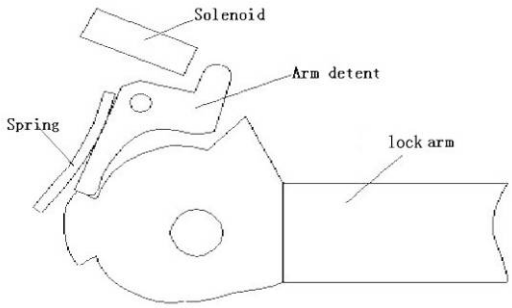

Fig. 3

1. Rotary unit

The unit comprises a shaft, toothed cam assembly and ratchet assembly. The toothed cam assembly comprises a steel toothed cam, polyurethane toothed cam and locking flange that are

bolted together with bolts and spacers
The shaft is inserted into the toothed cam assembly, secured by key. The upper cam is attached to the top of the toothed cam assembly by three screws. The nut screws onto the threaded end of the shaft and secures the shaft to the cams.

2. Locking device

The locking action is performed by the heads of the lock arms on the teeth of the toothed cam assembly. The polyurethane toothed cam, which is part of the toothed cam assembly, reduces the noise produced by the action of the lock arms on the cam teeth. Cam profile is designed so that the shaft rotation may be locked at 5s intervals. The lock arms are pivot-mounted on the bases and are moved by the moving cores of two cores of two solenoids mounted to the base. One of the solenoids locks clockwise, the other anti-clockwise rotation. The locking device is available in two versions. Activation of the solenoid causes the lock arm to move to engage to the cam teeth and prevent turnstile rotation in one direction. When the solenoid is de-energized, the lock arm is returned to the released position by the action of the spring.

3 .Positioning cam

The positioning cam (see fig. 2) is machined a guide way with a special profile. In this guide way, three points at a minimum distance from the centre are arranged at 120°intervals and correspond to the three positions of the tripod.
A notch in the cam engages and guides pin on the end of the positioning level. The lever hinges on the pivot and also mounts pins and for positioning spring and the damper. The other end of the spring and the damper are pivot-mounted on the base.
Once the guide pin has travelled past the apex in the cam guide way, the action of the spring causes the rotary unit to rotate a full 120°, thereby returning the tripod to the barrier position. The tension of the positioning spring can be adjusted by screw.

4. Damper (Shock absorber)

The function of the damper is to adjust the force exerted by the spring on the rotary unit in order to ensure that the unit comes to a gentle stop.
During the first half of rotation (rising profile in the guide way) the damper expands and in the second half (failing profile), it contracts. During the entire rotation, the damper exerts a braking force (1-8) in proportion to the rotation speed.

5. Restoring device.

The function of the restoring device is that the positioning sensor can receive a signal and then transmit it to the drive board when the arm has rotated about 110°.

6 .Anti reversal device

The anti-reversal device is used to prevent rotation of the rotary unit in the opposite direction to that of the initial rotation. This means that once the tripod has been moved in one direction, the device will prevent a reverse movement in the opposite direction.
Under influence of solenoid 1# (see fig.1), the lock arm will rotate to the left limit position instantly and disengage the toothed cam 1#. At the same time, the lock arm 2# won't move in order to prevent toothed cam from rotating to the opposite position.

7. Tripod

The tripod, which is fitted by three screws, is composed of three lock arms, three arm detents and a drop arm. The arms are positioned at 120° intervals, so that when the tripod comes to rest, one of the arms will be in the barrier position.

Wiring diagram of Electronic circuit board

Tri-pod Turnstile

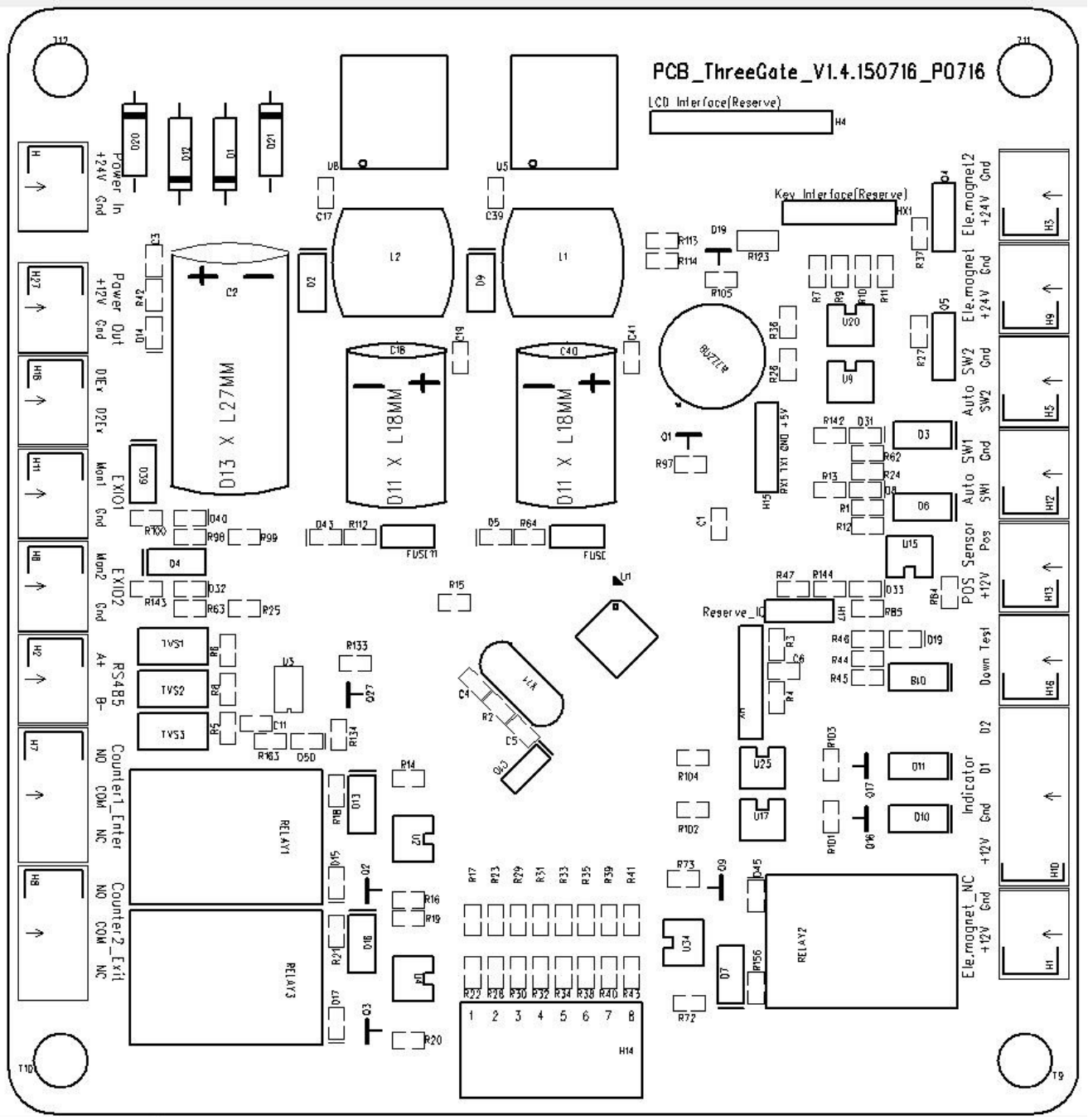

No	Port Sign	Instructions
1	+24V	24V input power supply to PCB board
2	GND	
3	+12V	12V power Output to Light bar, counter and so on.
4	GND	
5	D1Ex	NO USE
6	D2Ex	
7	Man1	Entry button for manual opening gate input
8	GND	
9	Man2	Exit button for manual opening gate input

10	GND	
11	A+	485 communication
12	B -	
13	NO	Entry relay normally open and normally close interface which also can connect entry counter
14	COM	
15	NC	
16	NO	Exit relay normally open and normally close interface which also can connect exit counter
17	COM	
18	NC	
19	+12V	+12 V power supply for arm drop down circular solenoid
20	GND	
21	D1	Entry LED indicator signal input
22	D2	Exit LED indicator signal input
23	+12V	+12 V power supply for arm drop down circular solenoid
24	GND	
25	Down	Testing for drop down function
26	Test	
27	+12V	Position sensor full close in place signal input, NO connect 12V, COM connect POS, once people pass, it will give closing gate signal
28	POS	
29	SW1	Entry opening signal input, Dry contact signal and Access control PCB board entry opening relay signal (NO connect SW1, COM connect GND, and the relay time of access control board should be set “0” or “1”）
30	GND	
31	SW2	Exit opening signal input, Dry contact signal and Access control PCB board exit opening relay signal (NO connect SW2, COM connect GND, and the relay time of access control board should be set “0” or “1”））
32	GND	
33	+24V	Entry square solenoid signal input, normally 0v input, when got entry opening gate signal, the voltage will be 24v output and rock arm will open
34	GND	
35	+24V	Exit square solenoid signal input, normally 0v input, when got exit opening gate signal, the voltage will be 24v output and rock arm will open
36	GND	

DIP switch instructions：

DIP switch time instruction: “1~7” for delay time assembly, “8” for memory setting:

64	32	16	8	4	2	1				<- “ Value”
The number “1” of following instruction show “ON” position.								Value	Delay time	
7	6	5	4	3	2	1				<- Position
0	0	0	0	0	0	1		1	2S	
0	0	0	0	0	1	0		2	2S	
0	0	0	0	0	1	1		3	2S	
0	0	0	0	1	0	0		4	2S	
0	0	0	0	1	0	1		5	2.5S	
0	0	0	0	1	1	0		6	3S	
0	0	0	0	1	1	1		7	3.5S	
0	0	0	1	0	0	0		8	4S	
0	0	0	1	0	0	1		9	4.5S	
0	0	0	1	0	1	0		10	5S	
0	0	0	1	0	1	1		11	5.5S	
0	0	0	1	1	0	0		12	6S	
0	0	0	1	1	0	1		13	6.5S	
0	0	0	1	1	1	0		14	7S	
0	0	0	1	1	1	1		15	7.5S	
0	0	1	0	0	0	0		16	8S	
0	0	1	0	0	0	1		17	8.5S	
0	0	1	0	0	1	0		18	9S	
0	0	1	0	0	1	1		19	9.5S	
0	0	1	0	1	0	0		20	10S	

With memory refers to accumulative total of swiping card times, for example: with memory function, if swiping valid card 5 times, it can pass five peoples; without memory function, if swiping valid card 5 times, it only can pass one people.

Test and Install Instruction

Test

1.The test preparation

Such as the installation , we have completed connection of the circuit drive in the plate, and provide 220 V for turnstile, control PCB board connected to the computer (control PCB board is external equipment of turnstile , not turnstile inside parts).

2. Check the wiring

When connected power debugging, please check the wiring diagram according to each parts of the line is connected,

Note: Protective earth wire of equipment must reliable grounding, otherwise don't allow debugging.

3. Function test

(1) Turnstile actually pick two way signal (come in and out).

(2) If the installation has LED indicator light on the surface, if the control PCB board receive the legitimate signal, turnstile will have green arrows in the direction.

1. Install Instruction

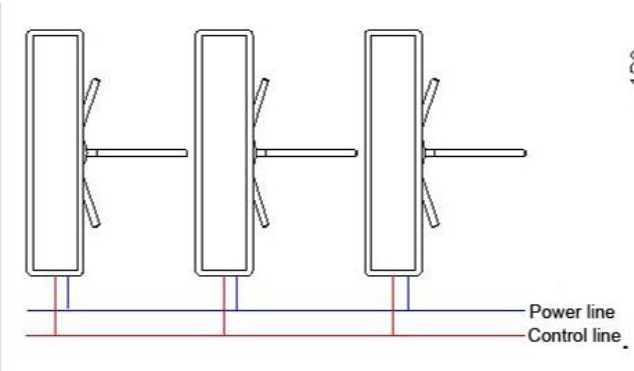

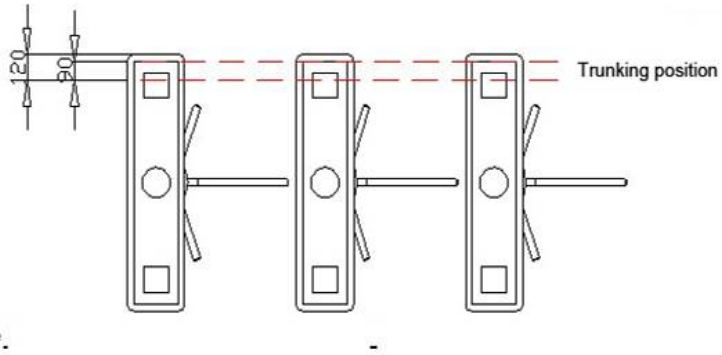

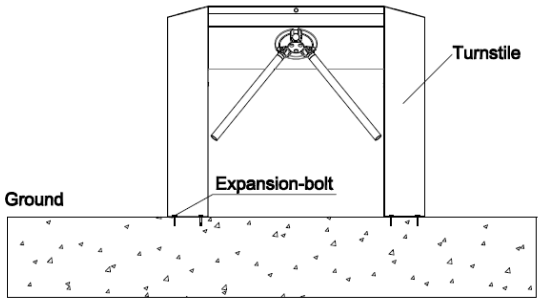

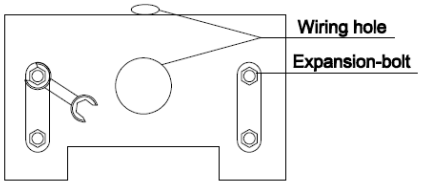

1.Before installation, below the turnstile installed position need embed two tube , one is 220V,3 x 1.5 single-phase power lines ,the other is 4 x 0.5 shielding line.

2. According to the position of the adjustment puts turnstile, and open the side door, you can see four installation holes, please use expansion bolt (specifications for M12) to fixed the turnstile.

Technical parameter

Item	Description
Cabinet	304 stainless steel
Reliability of the core	3million, no fault
Weight	55Kg(bridge type)
Arm length	510(mm)
Max thrust capacity	60Kg
Driving force of arms	3Kg
Driving mode	digital
Direction of rotation	Unidirectional/ Bidirectional (controllable)
Indicator lamp	Green means passage
Power supply for core：	AC220V ±10％（AC24V,DV12V）
Voltage of drop arm device:	DC12V ±5％
Method of arm dropping	It will drop when the electricity is cut off.
Method of positioning the lock arm:	It can be positioned manually or automatically.
Operational voltage	DC 24V ±5％
Voltage of indicator lamp：	DC12V ±5％(standard)
Power consumption	10W
Working environment	Indoors or outdoors(outdoor is optional)
Working temperature	-30℃～60℃
Humidity	5％～90％
Waterproof	≧IP31
Installation interfaces for card readers：	2
Control interface	relay signal input
Time needed for opening	0.2 seconds
Passing speed	30~45 persons/min

Daily maintenance and trouble shooting

1. General indications

The tripod turnstile should be inspected and cleaned at regular intervals in order to maintain the

components in good working order and to check for signs of wear. The following indications refer to the installation where the average number of transits per year is equal to two million. When the tripod turnstile is used in a dusty area, the regular interval for inspection should be shortened. If used in the subway or the light rail station, the inspection interval is recommended to be 6 months. The users are also encouraged to determine the interval according to their own situation.

To avoid the risk of electric shock, always ensure that the electrical power is disconnected before inspecting the mechanism.

2. Component

Lock arms and solenoids (Operation to be carried out with the power supply disconnected.): —Grease the pins of the lock arms that slide on the solenoid shaft.—Grease the solenoid shaft and spring, and do not grease the core of the solenoid—check that the shaft/lock arm assembly moves freely.

3 .Oil pressure of the damper

Operation should be carried out with the power supply disconnected： --check whether the damper oil spills; --check whether the force exerted by the spring is enough； -- The force exerted by the spring should match that exerted by the damper. Generally speaking, the former need to be slightly more powerful.

4. Upper positioning cam

Operation should be carried out with the power supply disconnected.—Loosen the spring of the positioning lever.—Check the guide way in the cam is clean and not excessively worn. –check some metal powder or the like sticks to the solenoid—Check the guide pin of the positioning lever for excessive play.—Check the magnetic strip is perfectly attached to the edge of the cam——Refit the cam -- adjust the spring of the positioning lever.

5. Tripod

Operation should be carried out with the power supply disconnected. Check tightness of the three securing the base plate to the mechanism shaft.

6. Emergency Drop Arm Device

Clean all dust from the arm detents, the arm drop lever and the relative solenoid. Do not lubricate these parts.

7. Cable and Connectors

Operation should be carried out with the power supply disconnected：

--Check that the wire connectors are firmly attached.

--Check that the terminals are fully tightened.

--Check that the insulation of the wires is in good condition and that no conductors are exposed.

8. Tips and trouble shooting:

Q1: Passing two or three people after swipe card at a time.

Reasons: 1. The limited switch didn't be touched by the right screw cap when the turn plate rotating. (Or didn't receive the effective signal even touched)

2. The access controller set delay time, when the driver board received the close signal, which the gate will waiting for delay time over, then close gate.

3. The middle lock arm of square solenoid got stuck, then flexing insensitively

4. The driver board fault.

Solution: 1.Adjusting the position of limited switch and the right screw cap, made both of them can connected.(Checking the circuit of limited switch or change the limited switch)

2. Setting the delay time to 0

3. Changing the square electromagnet.
4. Changing the driver board.

Q2: Got chuck when rotating to the half way.

Reasons: That drop arm device is effect turn plate move route.

Solution：1. Checking if the screw of boom support is loose, if yes, should raise it up by hand,Then put it in the middle position and tightening.

2. Checking if whether the solenoid of drop arm attract the below plate or not, if didn't, need to adjust upper the below plate manually, making the solenoid attract the plate (If manual adjusted failed. Firstly, checking if there have clutter between the solenoid and the below plate patch so that informed a gap. As won't attract closely if exist gap; Second, checking if the solenoid wire has been correct connected and if have something damage of electromagnet.)

3. The screw didn't loose and the solenoid attracts with below plate, which need to tightening, then doing according to first step.

Q3:Didn't drop arm automatically when power failure

Reasons: The drop arm device is putting too high so that the solenoid attracts plate, which button can not press arm lock parts.

Solution: Firstly, adjusting drop arm device upper by hand, making the solenoid attract plate, then unscrew the four screws on the drop arm device and press them down (normally attach the arm lock parts is ok),at last , tightening the screw and circle dropout test.

Q4:The arm won't operate when power on.

Reasons: 1. The drop arm device is putting too high, raising the arm up by manual, but arm lock will push drop arm device bottom, but solenoid can't reach to the position which attract plate.

2.The drop arm device is putting too low, raising the arm up by manual, the arm lock will push drop arm device bottom, after solenoid attract plate, the arm haven't be fixed to the balance position, so the bottom of drop arm device pressed the arm lock ,can't be closed.

Solution: Firstly, pressed the bottom of drop arm device ,making the solenoid attracts plate, then loosen the four screws which are fixed on the drop arm device, the reasons to made the situation is that the drop arm device so high or too low. So that need to adjust the drop arm device to a suit position.

Q5: The arm device is not vertical.

Reasons: The drop arm device is putting too low, when power off, the circle solenoid desorbs automatically. When drop arm device is downing, which will push arm detent to release lock arm, during the dropping the lock arm will push-back, when drop arm device at higher position, but arm bar still no finish drop down, so will not vertical.

Solutions: Loosening the four screws on the drop arm device, then upper the arm manually and moving it up to the distance which against bar lock from 0.2~0.5mm ,tightening the four screws.

Q6:The rotating speed is too slow or fast.

Reasons: Too slow is because the shock absorber over tight, and too fast is too loose.

Solution: Adjusting the shock absorber, if no much effective, will need to check the machine core spring of positioning lever (which local in near position cam), whether got chuck or damage, if yes, will need to change the pedestal.

Q7: The gap between turnplate and housing is bigger

Reasons:1.The screws which used to fix the machine core is loose, making fall down.

2.The shaft of machine core loose weld and nut is loose.

3.The screws which used to fix turn plate is loose, making fall down.

Solutions: 1.Raising the machine core up to the position which the distance between turn plate and machine body is from 1mm to 3mm,then tightening the screws.

2. Twisting down the three screws which used to fix turn plate, taking the screws out and tightening the circle nut which under the machine core, adding the screw glue and fixed the turn plate again.

3. Tightening directly the screws which used to fix the turn plate.

Q8: Other questions

Solution: Changing the driver PCB board or other spare parts, like electric leakage, which need to change transformer, or power supply, and so on.

Date of delivery	Turnstile model

Maintain record

Service Dates	Trouble descriptions	Solution	Service People	Sign and stamp

#24,Shambavi Building, 23rd Main, Marenahalli,
JP Nagar 2nd Phase, Bangalore - 560078
Phone: 91-8026090500 | Email : sales@esslsecurity.com
www.esslsecurity.com